LECTRIC 1 & RF 92"

16:9 | 70 lbs

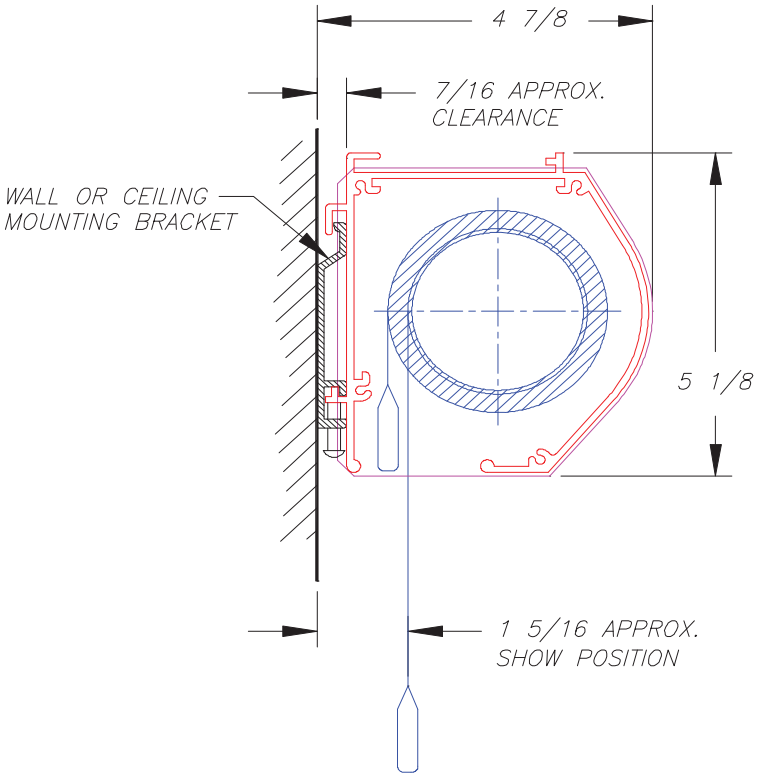

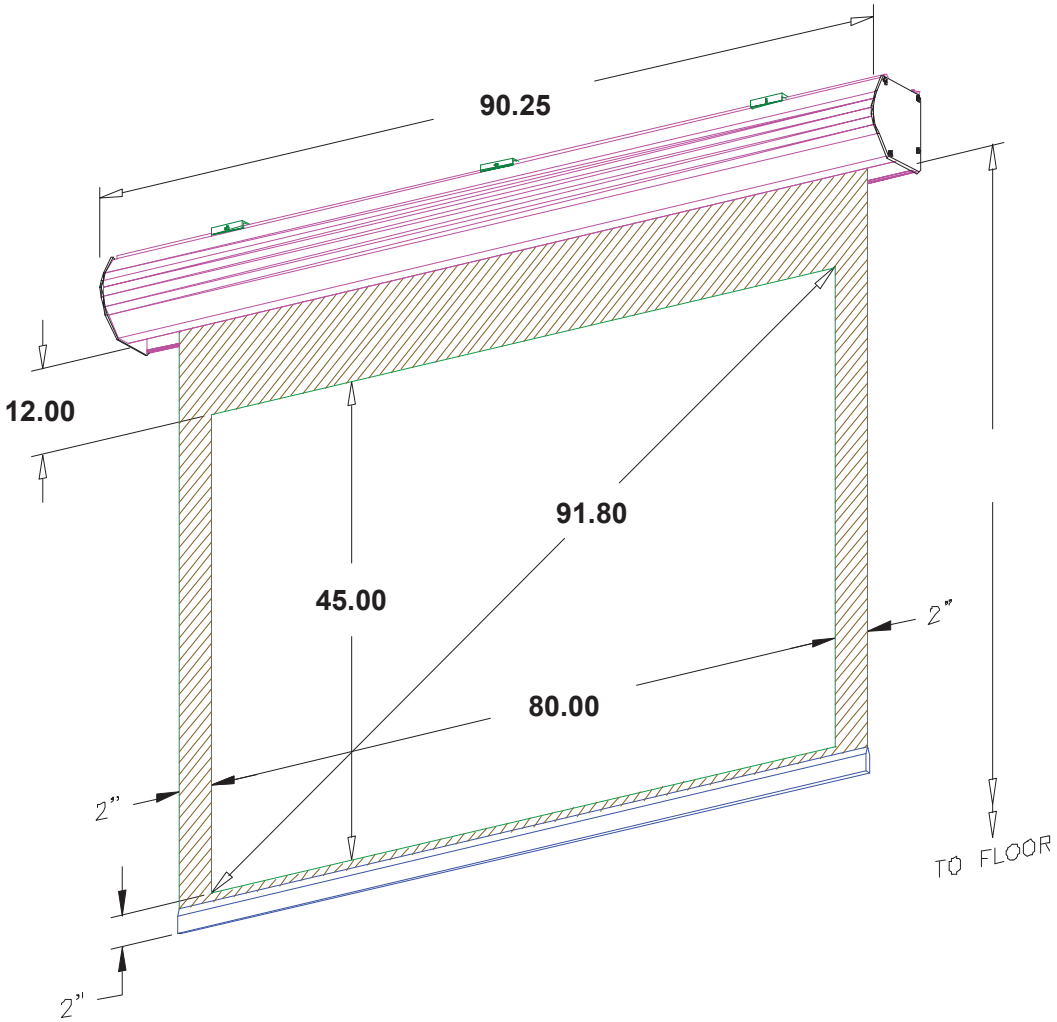

Date: _____ Dealer: _____ Client or Project No: _____ Phone: _____ PO#: _____

This quotation is valid for 30 days from the date shown.

Fabric Surface: _____ Frame Finish: _____

VUTEC PROJECTION SCREEN TECHNOLOGY

11711 W. Sample Road Coral Springs, FL 33065-3155

T +1 (800) 770-4700 | F +1 (800) 548-5885 | T 954 545-9000 | Fax 954 545-9001

vutec.com

vuteccorporation VutecCorp vuteccorp @Vutec

LECTRIC 1 & RF 103"

16:9 | 75 lbs

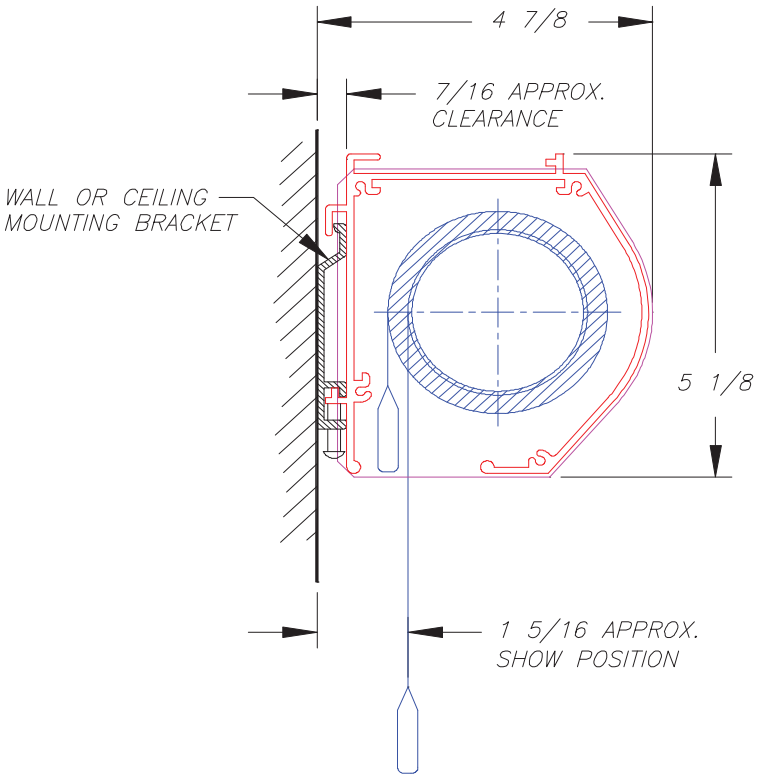

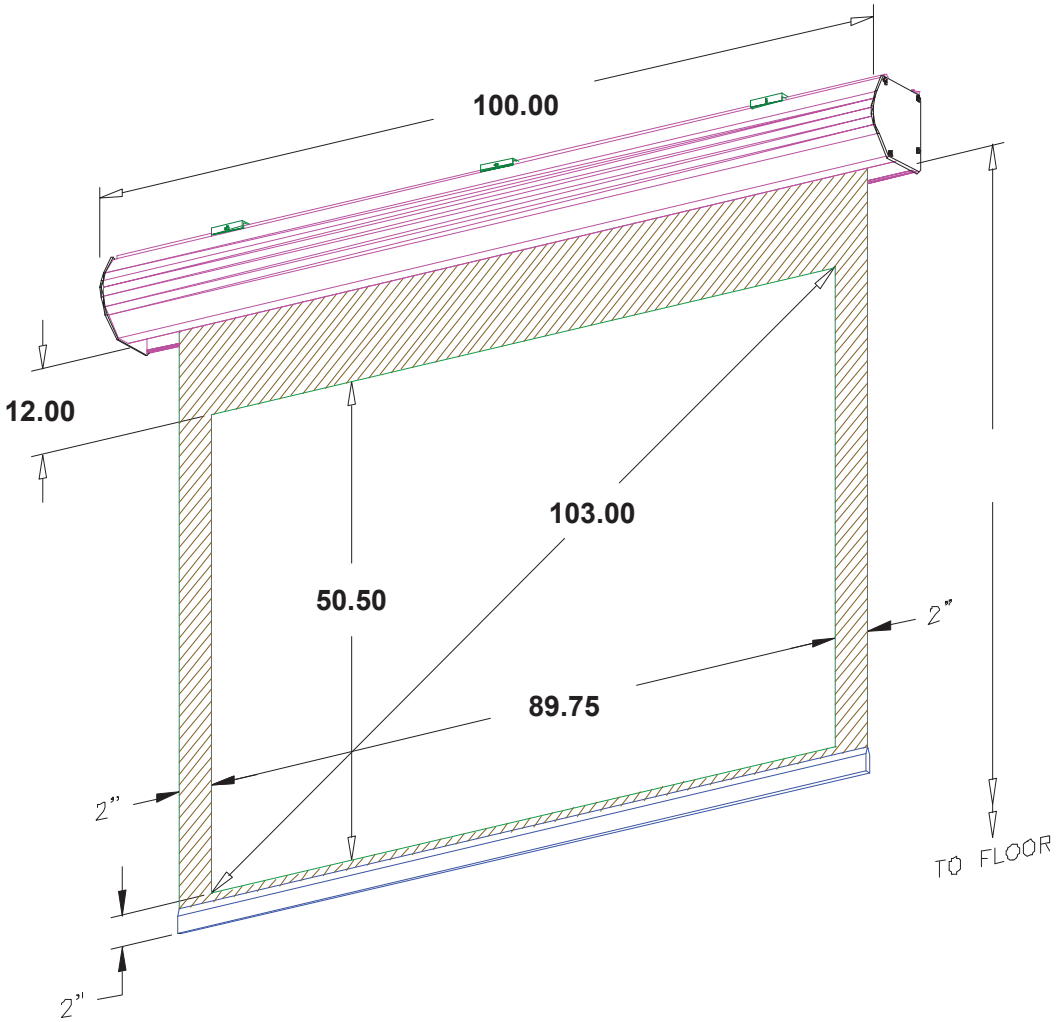

Date: _____ Dealer: _____ Client or Project No: _____ Phone: _____ PO#: _____

This quotation is valid for 30 days from the date shown.

Fabric Surface: _____ Frame Finish: _____

VUTEC PROJECTION SCREEN TECHNOLOGY

11711 W. Sample Road Coral Springs, FL 33065-3155

T +1 (800) 770-4700 | F +1 (800) 548-5885 | T 954 545-9000 | Fax 954 545-9001

vutec.com

vuteccorporation VutecCorp vuteccorp @Vutec

LECTRIC 1 & RF 110"

16:9 | 79 lbs

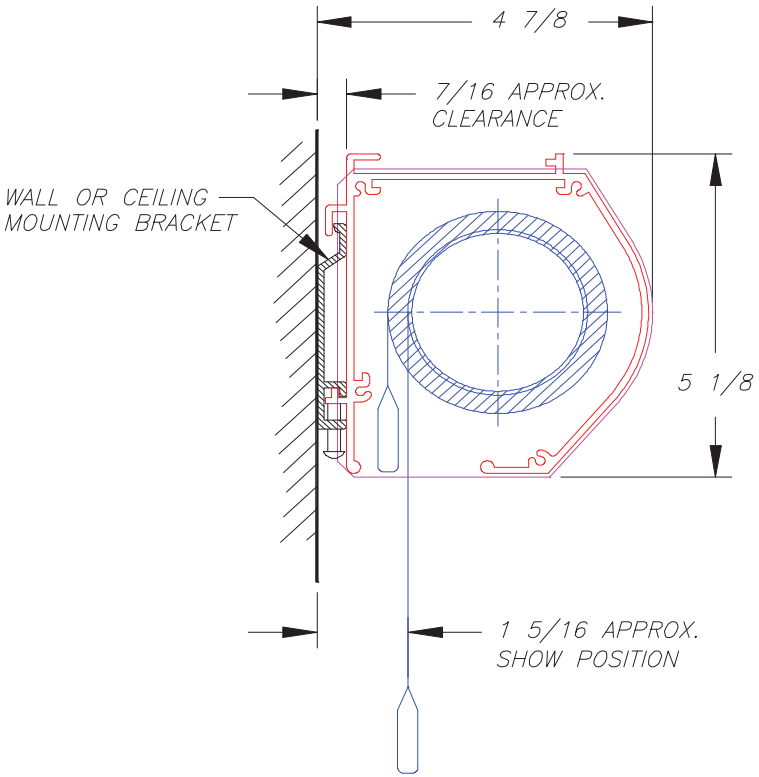

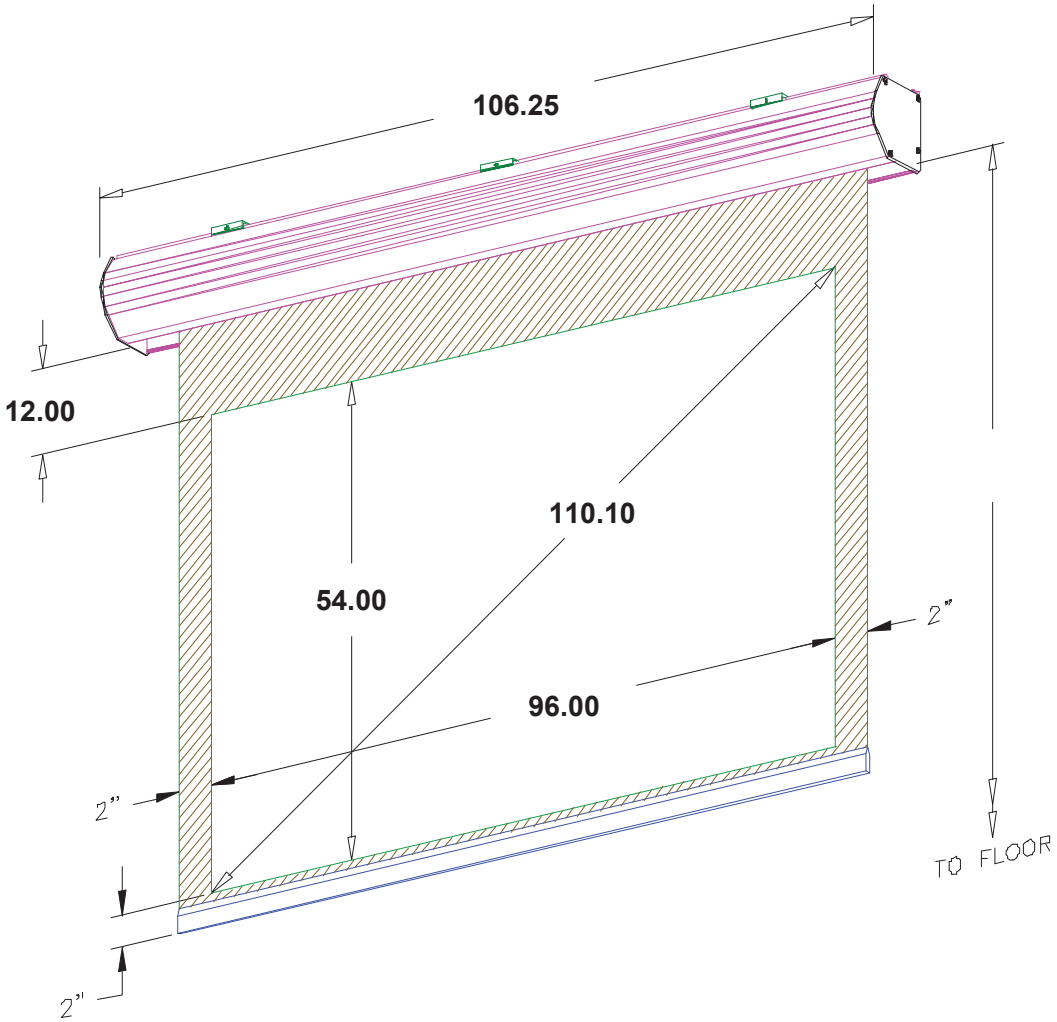

Date: _____ Dealer: _____ Client or Project No: _____ Phone: _____ PO#: _____

This quotation is valid for 30 days from the date shown.

Fabric Surface: _____ Frame Finish: _____

VUTEC PROJECTION SCREEN TECHNOLOGY

11711 W. Sample Road Coral Springs, FL 33065-3155

T +1 (800) 770-4700 | F +1 (800) 548-5885 | T 954 545-9000 | Fax 954 545-9001

vutec.com

vuteccorporation VutecCorp vuteccorp @Vutec

LECTRIC 1 & RF 123"

16:9 | 86 lbs

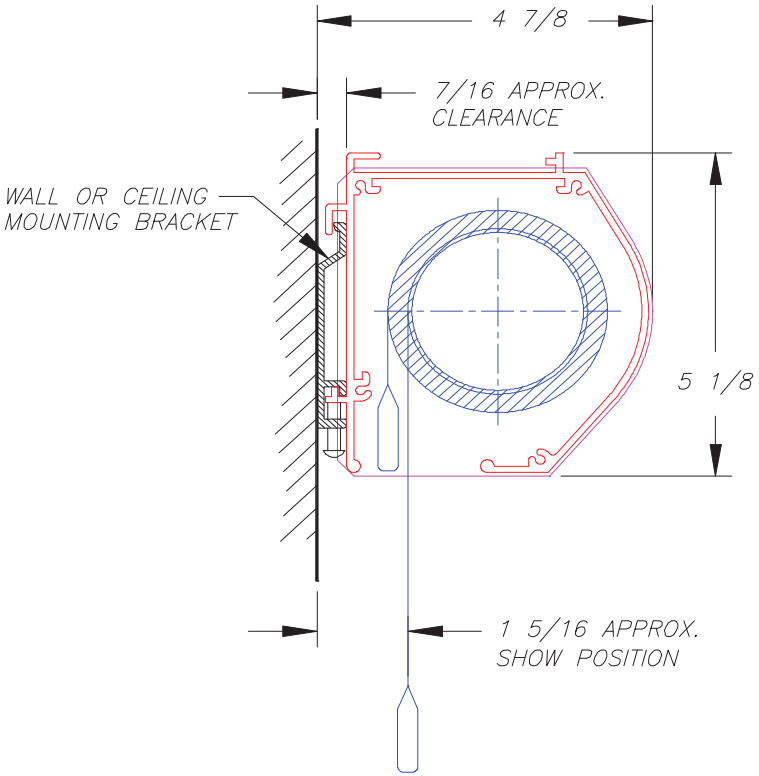

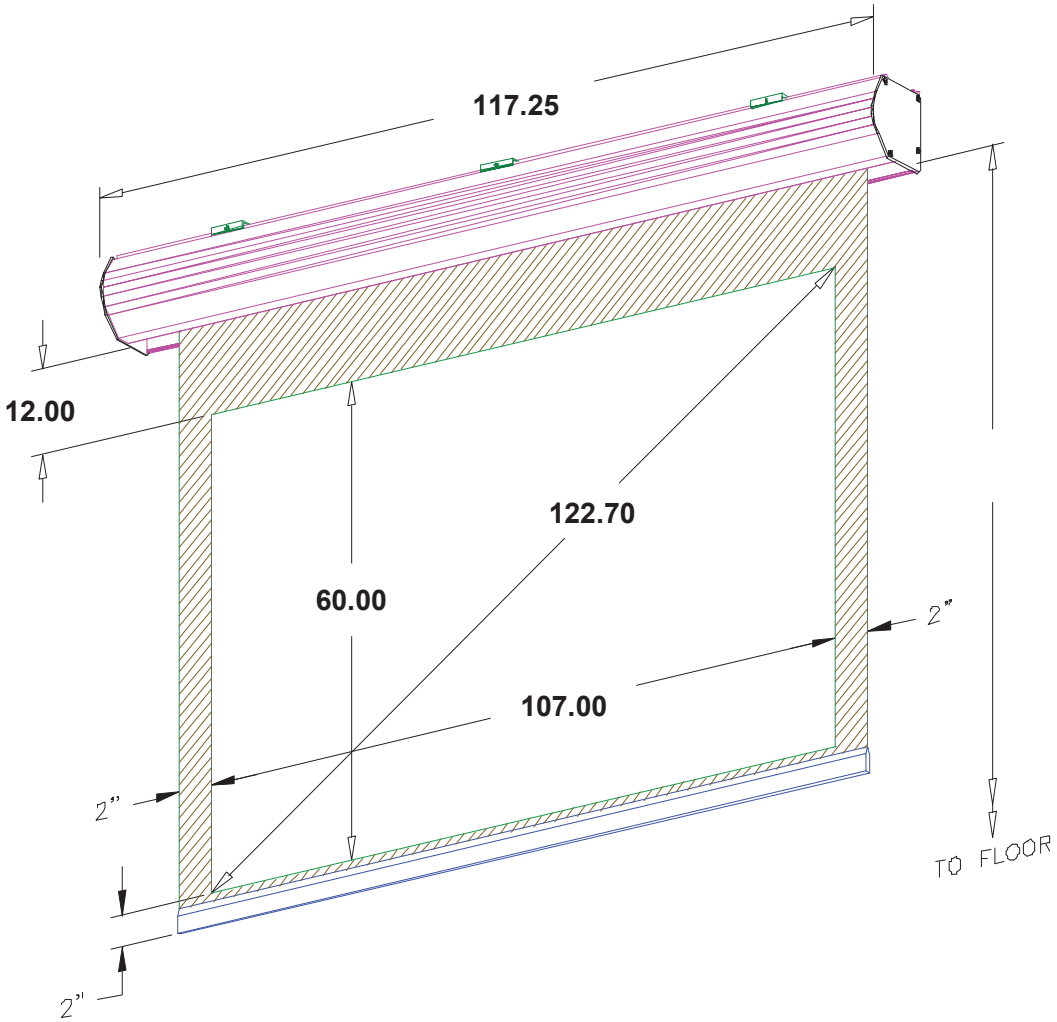

Date: _____ Dealer: _____ Client or Project No: _____ Phone: _____ PO#: _____

This quotation is valid for 30 days from the date shown.

Fabric Surface: _____ Frame Finish: _____

VUTEC PROJECTION SCREEN TECHNOLOGY

11711 W. Sample Road Coral Springs, FL 33065-3155

T +1 (800) 770-4700 | F +1 (800) 548-5885 | T 954 545-9000 | Fax 954 545-9001

vutec.com

vuteccorporation VutecCorp vuteccorp @Vutec

LECTRIC 1 & RF 133"

16:9 | 91 lbs

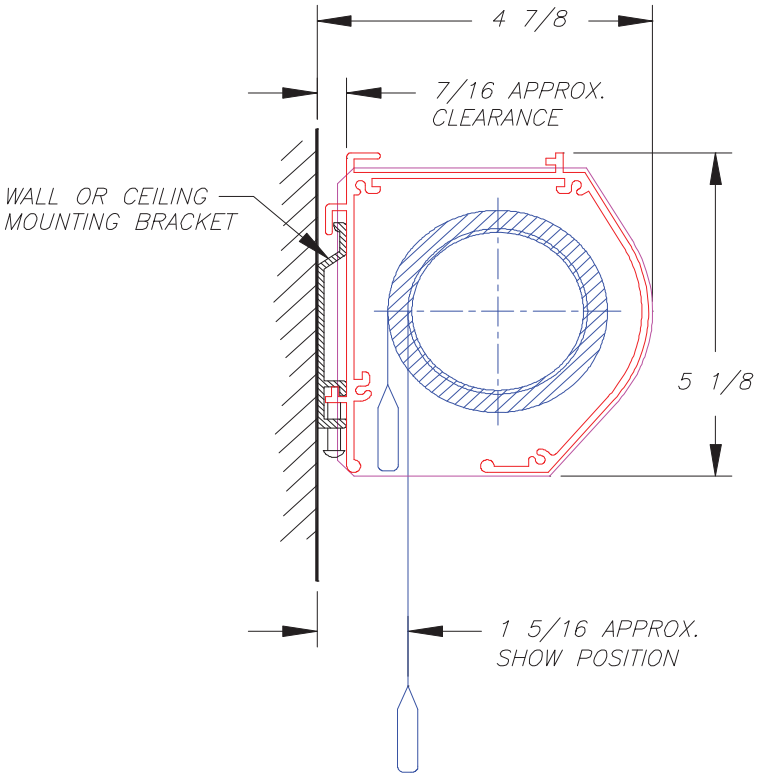

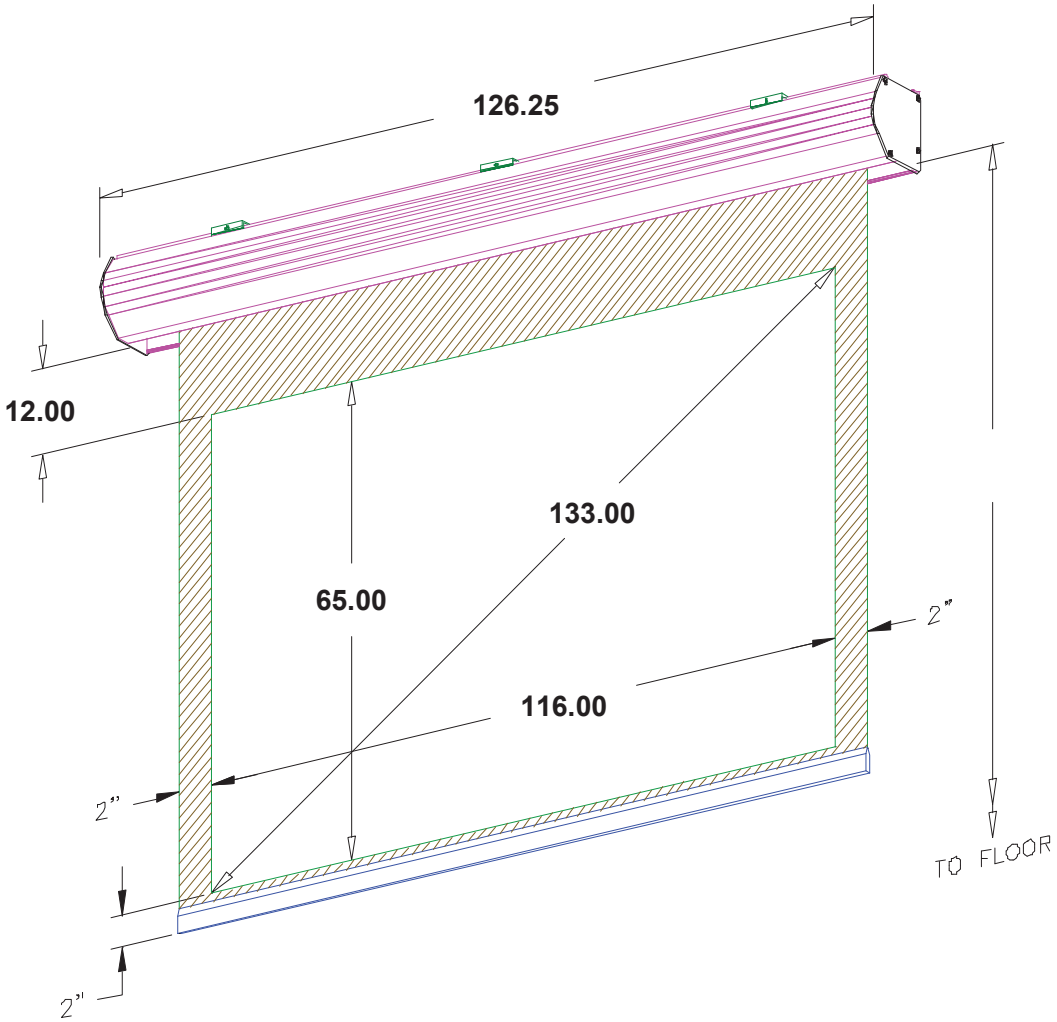

Date: _____ Dealer: _____ Client or Project No: _____ Phone: _____ PO#: _____

This quotation is valid for 30 days from the date shown.

Fabric Surface: _____ Frame Finish: _____

VUTEC PROJECTION SCREEN TECHNOLOGY

11711 W. Sample Road Coral Springs, FL 33065-3155

T +1 (800) 770-4700 | F +1 (800) 548-5885 | T 954 545-9000 | Fax 954 545-9001

vutec.com

vuteccorporation VutecCorp vuteccorp @Vutec

LECTRIC 1 & RF 147"

16:9 | 99 lbs

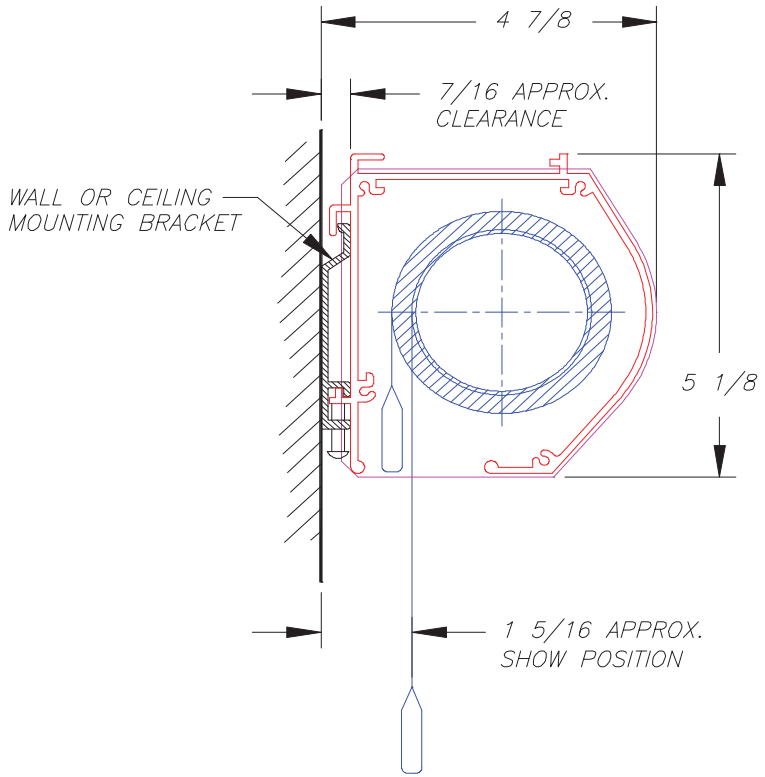

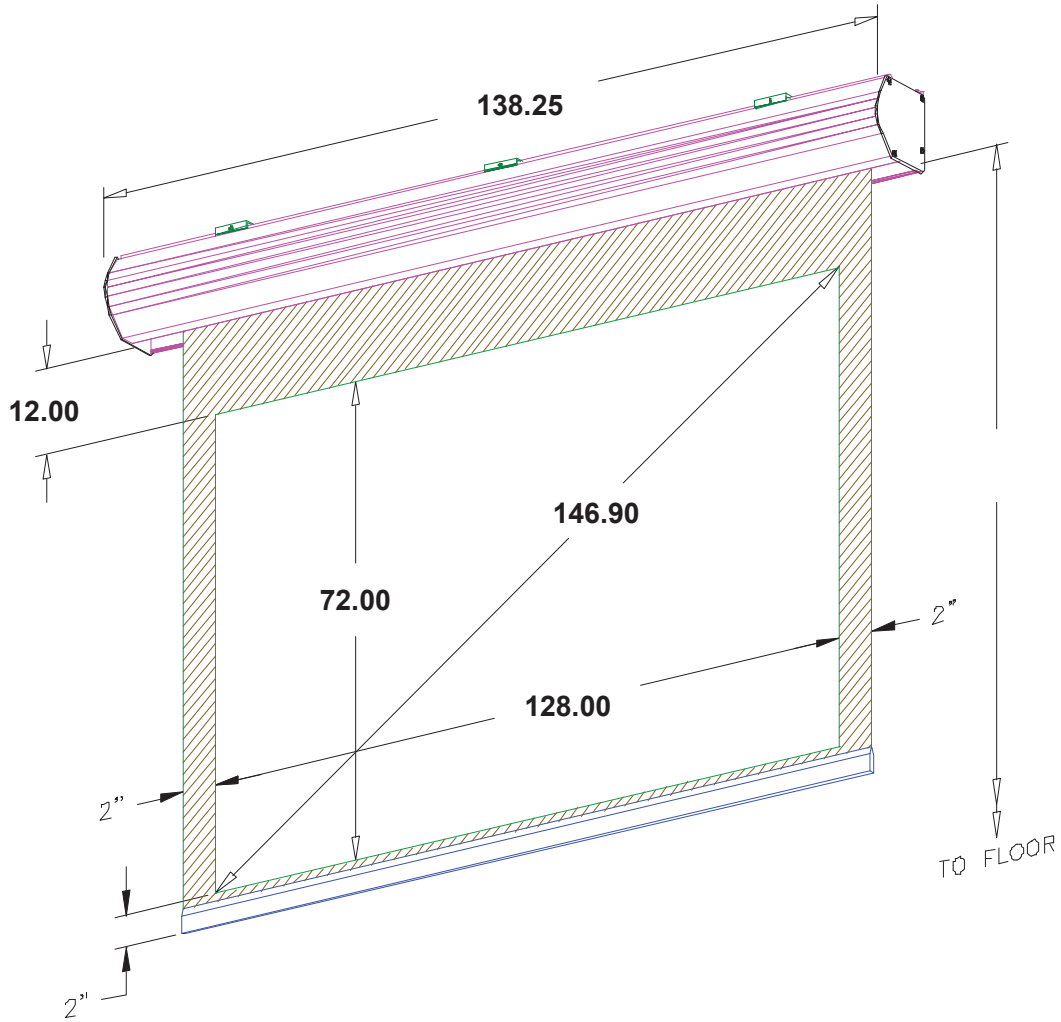

Date: _____ Dealer: _____ Client or Project No: _____ Phone: _____ PO#: _____

This quotation is valid for 30 days from the date shown.

Fabric Surface: _____ Frame Finish: _____

VUTEC PROJECTION SCREEN TECHNOLOGY

11711 W. Sample Road Coral Springs, FL 33065-3155

T +1 (800) 770-4700 | F +1 (800) 548-5885 | T 954 545-9000 | Fax 954 545-9001

vutec.com

vuteccorporation VutecCorp vuteccorp @Vutec

LECTRIC 1 & RF 159"

16:9 | 106 lbs

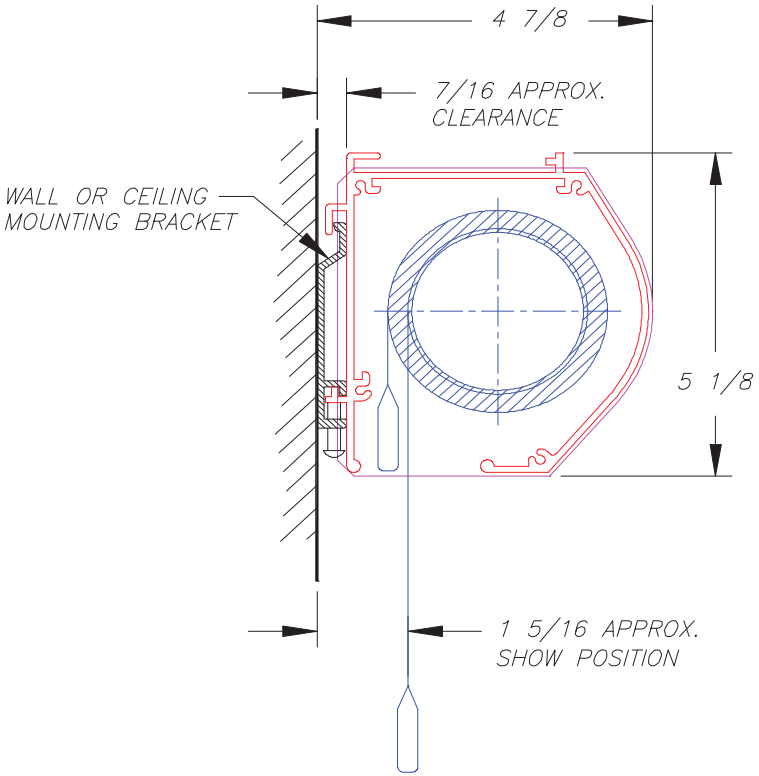

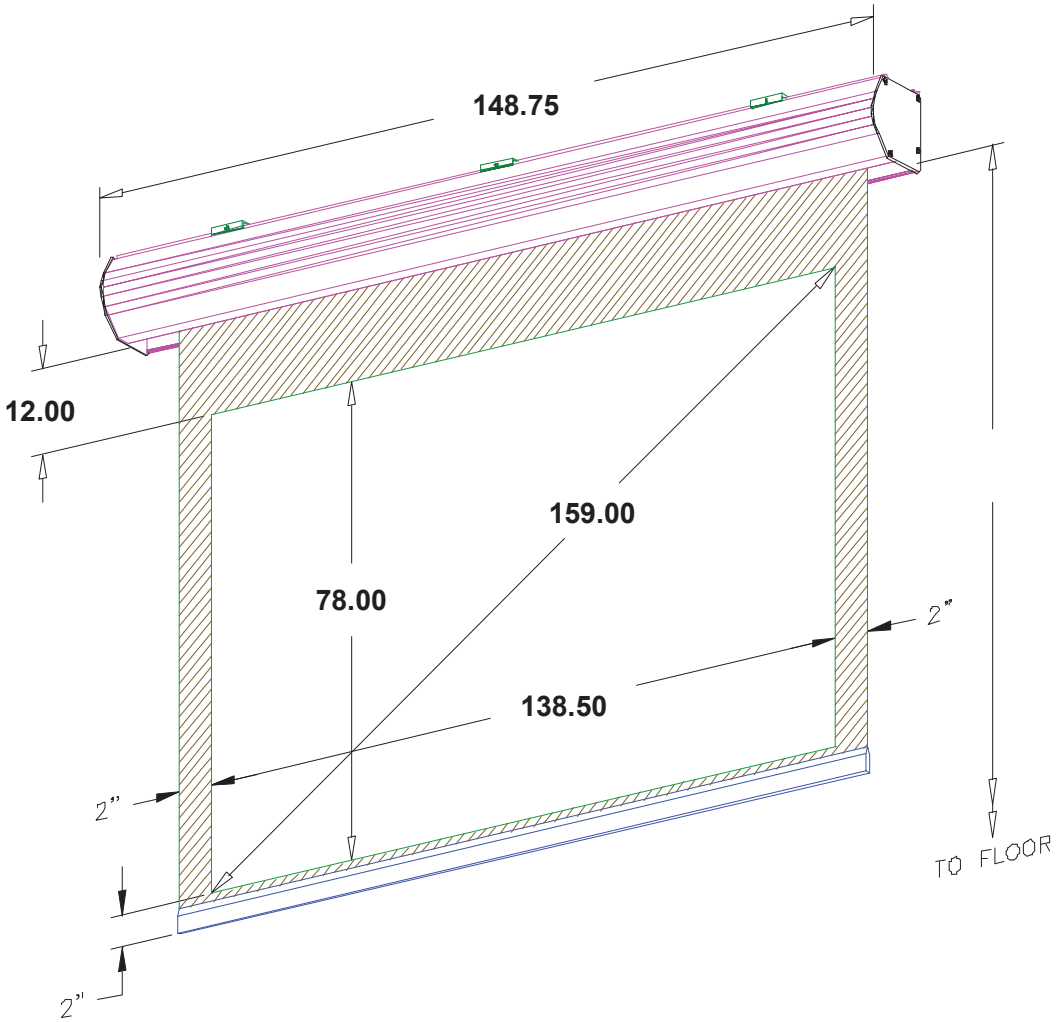

Date: _____ Dealer: _____ Client or Project No: _____ Phone: _____ PO#: _____

This quotation is valid for 30 days from the date shown.

Fabric Surface: _____ Frame Finish: _____

VUTEC PROJECTION SCREEN TECHNOLOGY

11711 W. Sample Road Coral Springs, FL 33065-3155

T +1 (800) 770-4700 | F +1 (800) 548-5885 | T 954 545-9000 | Fax 954 545-9001

vutec.com

vuteccorporation VutecCorp vuteccorp @Vutec